DELIVERING FIRE RESISTANCE AND SUPERIOR FLOOR PERFORMANCE

TRUS JOIST® TIMBERSTRAND® LSL FLOOR JOISTS

New residential building codes require you to rethink how to frame floors when it comes to fire resistance. When the heat is on, Trus Joist TimberStrand LSL offers the high-perfomance floor joists you can rely on.

- TimberStrand LSL is a one-piece solution for floor joist applications
- Straight and strong for superior floor performance
- Reduce jobsite material waste and labor costs by allowing contractors to drill holes through the joists
- Optimize floor performance and deliver on customer expectations using Trus Joist TJ-Pro™ Rating
- Meets 2012 IRC (R501.3) / 2015 IRC (R302.13) for fire protection of floors

1.5E TIMBERSTRAND® LSL FLOOR JOISTS

SPAN TABLES

Maximum Floor Joist Spans

Joist Size	Joist Weight [plf]	Full Depth Solid Mid-Span Blocking[1]				No Mid-Span Blocking			
		L/480 Live Load Deflection; L/240 Total Load Deflection							
		12" o.c.	16" o.c.	19.2" o.c.	24" o.c.	12" o.c.	16" o.c.	19.2" o.c.	24" o.c.
40 PSF (Live) / 15 PSF (Dead)									
1½" x 9½"	4.5	17'-6"	16'-1"	15'-4"	14'-5"	17'-6"	16'-1"	15'-4"	14'-5"
1½" x 11⅞"	5.6	21'-7"	19'-10"	18'-10"	17'-8"[2]	21'-7"	19'-10"	18'-10"	17'-8"[2]
1½" x 14"	6.6	25'-3"	23'-2"	22'-0"[2]	20'-2"[2]	25'-3"	23'-2"	22'-0"[2]	20'-2"[2]
40 PSF (Live) / 25 PSF (Dead)									
1½" x 9½"	4.5	17'-6"	16'-1"	15'-4"	14'-5"[2]	17'-6"	16'-1"	15'-4"	14'-5"[2]
1½" x 11⅞"	5.6	**21'-7"**	19'-10"	18'-10"[2]	17'-0"[2]	**21'-7"**	19'-10"	18'-10"[2]	17'-0"[2]
1½" x 14"	6.6	**25'-3"**	**23'-2"[2]**	21'-4"[2]	17'-0"[2]	**24'-11"**	**22'-7"[2]**	21'-2"[2]	17'-0"[2]

Joist Size	Joist Weight [plf]	Full Depth Solid Mid-Span Blocking[1]				No Mid-Span Blocking			
		L/360 Live Load Deflection; L/240 Total Load Deflection							
		12" o.c.	16" o.c.	19.2" o.c.	24" o.c.	12" o.c.	16" o.c.	19.2" o.c.	24" o.c.
40 PSF (Live) / 15 PSF (Dead)									
1½" x 9½"	4.5	19'-3"	17'-9"	16'-11"	15'-11"	19'-3"	17'-9"	16'-11"	15'-11"
1½" x 11⅞"	5.6	23'-10"	21'-11"	20'-10"[2]	19'-7"[2]	23'-10"	21'-11"	20'-10"[2]	19'-3"[2]
1½" x 14"	6.6	**27'-10"**	25'-7"[2]	24'-3"[2]	20'-2"[2]	26'-5"	23'-11"	22'-5"[2]	20'-2"[2]
40 PSF (Live) / 25 PSF (Dead)									
1½" x 9½"	4.5	**18'-9"**	**17'-4"**	16'-5"	15'-6"[2]	**18'-9"**	**17'-4"**	16'-5"	15'-6"[2]
1½" x 11⅞"	5.6	**23'-2"**	**21'-4"[2]**	**20'-3"[2]**	17'-0"[2]	**23'-2"**	**21'-0"[2]**	**19'-8"[2]**	17'-0"[2]
1½" x 14"	6.6	**27'-1"**	**24'-11"[2]**	21'-4"[2]	17'-0"[2]	**24'-11"**	**22'-7"[2]**	21'-2"[2]	17'-0"[2]

[1] Directly applied ceiling may be substituted for full depth Mid-Span blocking.

[2] Minimum 5½" bearing length required at intermediate supports of continuous span joists when the span length on either side of the intermediate bearing is greater than 16'-1" for 40/15 loading and 13'-7" for 40/25 loading.

To more accurately predict how a floor will perform, use the TJ-Pro Rating system. For more information on how the TJ-Pro Rating system works, visit weyerhaeuser.com/woodproducts and search using the key words "pro rating".

General Notes

- Span tables are based on:
  - Uniform loads.
  - Clear distance between supports.
  - Plate $F_{c\perp}$ = 425 psi (SPF)
  - More restrictive of simple or continuous span.
  - Minimum bearing length of 1¾" end and 3½" intermediate.
- For continuous spans, ratio of short span to long span should be 0.4 or greater to prevent uplift.
- **Bold** spans reflect initial dead load deflection exceeding 0.33".
- Assumed composite action with a single layer of 24" on-center span-rated, glue-nailed floor panels for deflection only.
- Weyerhaeuser recommends using solvent-based subfloor adhesives that meet ASTM D3498 (AFG-01) performance standards. When latex subfloor adhesive is required, careful selection is necessary due to a wide range of performance between brands.
- Minimum two rows of full depth blocking required on both spans when 1½" x 14" joists are used in continuous span applications. Blocking members to be placed at ⅓ points along each span, not exceeding 8' on-center.
- Attach temporary safety bracing (1x4 minimum) at 8' on-center and extend to braced wall during installation. Fasten to each joist with two 8d (0.113 x 2½") nails minimum (see the Trus Joist Installation Guide for Floor and Roof Framing, TJ-9001, for additional information).
- 1.55E TimberStrand LSL (equal or greater dimensions) may be directly substituted for products outlined in this document.

DESIGN PROPERTIES

Design Stresses[1] (100% Load Duration)

Grade	Orientation	G Shear Modulus of Elasticity [psi]	E Modulus of Elasticity [psi]	F_b Flexural Stress[2][3] [psi]	$F_{c\perp}$ Compression Perpendicular to Grain[4] [psi]	F_v Horizontal Shear Parallel to Grain [psi]
1.5E	Joist	93,750	1.5×10^6	2250	860	300[5]

[1] Unless otherwise noted, adjustment to design stresses for duration of load are permitted in accordance with the applicable building code.

[2] When structural members qualify as repetitive members in accordance with the applicable building code, F_b may be increased by 4% in addition to the modifications permitted in footnotes 1 and 3.

[3] For 12" depth; for other depths, multiply F_b by $(12/d)^{0.092}$.

[4] $F_{c\perp}$ shall not be increased for duration of load.

[5] Value accounts for large hole capabilities. See **Allowable Holes** on page 3.

1.5E TIMBERSTRAND® LSL FLOOR JOISTS

ALLOWABLE HOLES

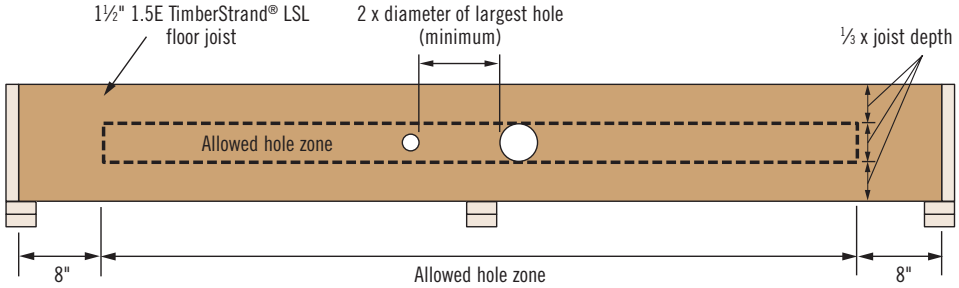

Joist Depth	Maximum Diameter of Hole
9½"	3"
11⅞"	3⅝"
14"	4⅝"

General Notes

- Round holes only.
- No holes within 8" of joist member ends.

For consideration of round holes exceeding the maximum diameter listed, use Forte® software or contact your Weyerhaeuser representative. Joists with holes exceeding the ⅓ diameter shall be fire-protected in accordance with 2015 IRC302.13.

WARNING: This product can expose you to chemicals including wood dust which are known to the State of California to cause cancer, and methanol, which are known to the State of California to cause birth defects or other reproductive harm. Drilling, sawing, sanding or machining wood products can expose you to wood dust. Avoid inhaling wood dust or use a dust mask or other safeguards for personal protection. For more information, go to www.P65Warnings.ca.gov and www.P65Warnings.ca.gov/wood.

LAPPED END DETAIL

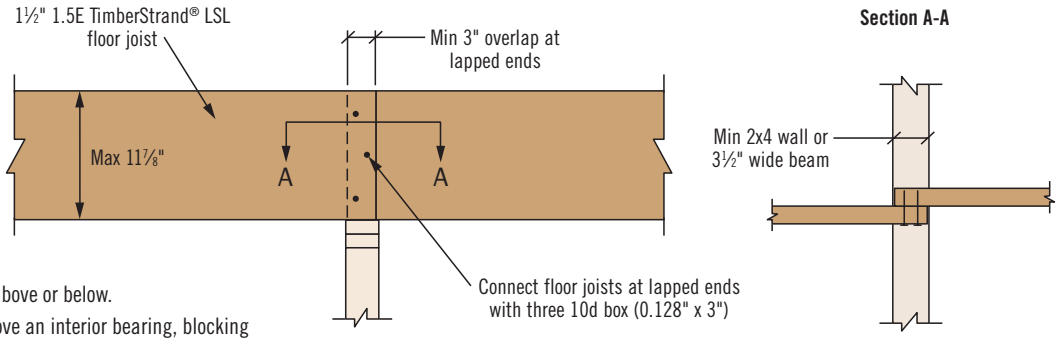

General Notes

- Minimum 3" lap.
- Blocking required at interior supports for lapped joists 14" deep and for all joist depths when butted together.
- Toenail floor joist to top plate or beam with three 8d (0.131" x 2½") nails.
- Blocking may be required with braced walls above or below.
- In the case of a load bearing wall located above an interior bearing, blocking may be required as specified by the designer of record.
- 2015 IRC Section R502.7 requires lateral restraint (blocking) at all intermediate supports in Seismic Design Categories D_0, D_1, and D_2.

FRAMING CONNECTORS

Simpson Strong-Tie®

Joist Size	Hanger	Nailing	
		Header	Joist
1½" x 9½"	LUS210	10d	10d
1½" x 11⅞"	LUS210	10d	10d
1½" x 14"	U214	16d	10d x 1½"

General Notes

- Leave 1/16" clearance (⅛" maximum) between the end of the supported joist and the header or the hanger.
- Nails: 16d = 0.162" x 3½", 10d = 0.148" x 3", and 10d x 1½" = 0.148" x 1½"
- For applications not specified here, refer to Simpson Strong-Tie Wood Construction Connectors catalog.

TJ-PRO RATING

A poor performing floor can harm a builder's image, compromise build efficiency, and cost money—regardless of demographic. That's why we developed TJ-Pro Rating. For over 50 years builders have looked to the Trus Joist® name for guidance on floor performance, and our decades of proven success with TJ-Pro Rating. Use TJ-Pro Rating with TimberStrand LSL floor joists to design floors your customers expect.

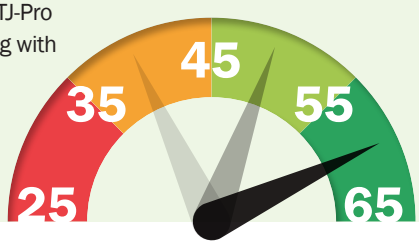

ECONOMY CONSISTENCY RELIABILITY DIFFERENTIATION

WE CAN HELP YOU BUILD SMARTER

You want to build solid and durable structures—we want to help. Weyerhaeuser provides high-quality building products and unparalleled technical and field assistance to support you and your project from start to finish.

Floors and Roofs: Start with the best framing components in the industry: our Trus Joist® TJI® joists; TimberStrand® LSL floor joists and rim board; and TimberStrand® LSL, Microllam® LVL, and Parallam® PSL headers and beams. Pull them all together with our self-gapping and self-draining Weyerhaeuser Edge Gold™ floor panels and durable Weyerhaeuser roof sheathing.

Walls: Get the best value out of your framing package—use TimberStrand® LSL studs for tall walls, kitchens, and bathrooms, and our traditional, solid-sawn lumber everywhere else. Cut down installation time by using TimberStrand® LSL headers for doors and windows, and Weyerhaeuser wall sheathing with its handy two-way nail lines.

Software Solutions: Whether you are a design professional or lumber dealer, Weyerhaeuser offers an array of software packages to help you specify individual framing members, create cut lists, manage inventories—even help you design a complete structural frame. Contact your Weyerhaeuser representative to find out how to get the software you need.

Technical Support: Need technical help? Weyerhaeuser has one of the largest networks of engineers and sales representatives in the business. Call us for help, and a skilled member from our team of experts will answer your questions and work with you to develop solutions that meet all your structural framing needs.

LIMITED LIFETIME
PRODUCT WARRANTY

Weyerhaeuser provides a limited warranty for the expected life of the structure for all Trus Joist® branded products. Product information, installation instructions, and the full text of each product's limited warranty (including limitations and exclusions) are available on the Weyerhaeuser website, from your Weyerhaeuser representative, or by calling toll free: 888-453-8358.

Additionally, Weyerhaeuser offers limited warranties on a broad variety of its other products. To see complete details of all Weyerhaeuser product warranties, visit weyerhaeuser.com/wood products/warranty.

1.888.453.8358 WEYERHAEUSER.COM/WOODPRODUCTS

Visit **weyerhaeuser.com/woodproducts/warranty** for copies of this and other Trus Joist® Engineered Wood Product warranties.

CONTACT US

1.888.453.8358 • weyerhaeuser.com/woodproducts/contact

Contact your local representative or dealer at:

February 2019 • Reorder TJ-8014
This document supersedes all previous versions. If this is more than one year old, contact your dealer or Weyerhaeuser rep.

, Weyerhaeuser, Forte, Microllam, Parallam, TimberStrand, TJI, and Trus Joist are registered trademarks and Edge Gold, and TJ-Pro are trademarks of Weyerhaeuser NR.
© 2019 Weyerhaeuser NR Company. All rights reserved. Printed in the USA.